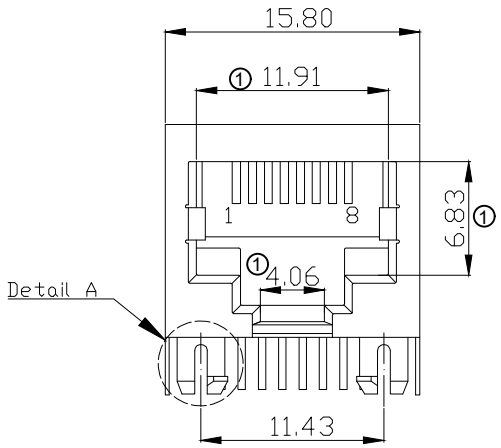

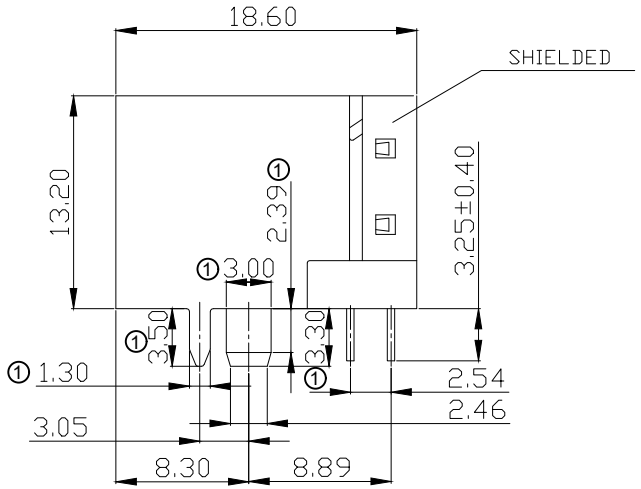

NOTES:

1. Electrical Char
   Insulation Resistance: 500MΩ min. 500V DC for 1 minute
   Contact Resistance: 30mΩ max.
   Rating Current: 1.5A max.
   Rating Voltage: 150V AC
   Dielectric Voltage: 1000 Vrms at 1MA 60 sec. min.

2. Physical Char
   Housing: PBT Glass filled (UL 94V-0) Color: Black
   Soldering Temperature: 235°C for 5 sec.
   Spring Wire: 0.45mm Dia Phosphor Bronze
   6u" Gold plating over Nickel
   Temperature Range: -40°C to +85°C
   Durability: 750 mating cycles min.

3. Packing: Tray

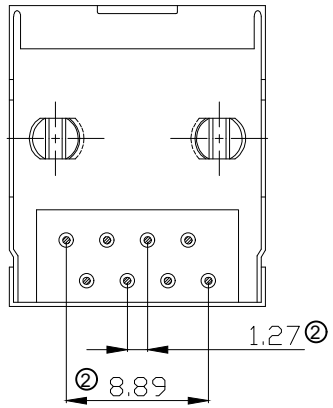

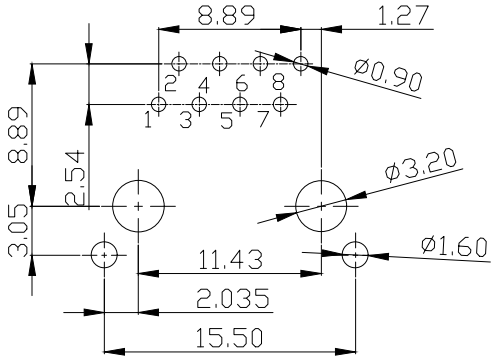

PCB LAYOUT
(TOP VIEW)

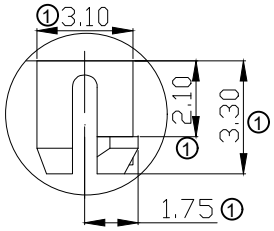

Detail A

RoHS compliant

Unit:mm

Scale	Free
TOLERANCE	
.XX	±0.20
.XXX	±0.13
.XXXX	±0.05
DIM	TOL
X.°	+0°30'
Angle	TOL

Id.	Modification	Date	Name
②	Correct dimension	14.02.2022	Daniel
①	Add dimension	09.12.2020	Daniel
⓪	Drawn	04.08.2016	Winnie

	Date	Name
Drawn	18.11.2020	Winnie
Approved	14.02.2022	Daniel

ASSMANN WSW components

Description: Modular jacks

ASSMANN WSW-No. A-2004-2-4-LPS-N-R

Drawing-No. ASS 7323 CO

rev02

Customer-No.

SHEET 1 / 1