Power Resistor for Mounting onto a Heatsink Thick Film Technology

FEATURES

- Compliant with requirement #26 of NF-EN45545-2
- High power 800 W at 85 °C bottom case temperature
- Wide resistance range: 0.3 Ω to 900 kΩ E24 series
- Non inductive
- Easy mounting
- Low thermal radiation of the case
- Material categorization: for definitions of compliance please see www.vishay.com/doc?99912

RoHS COMPLIANT

LINKS TO ADDITIONAL RESOURCES

3D Models

DIMENSIONS in millimeters

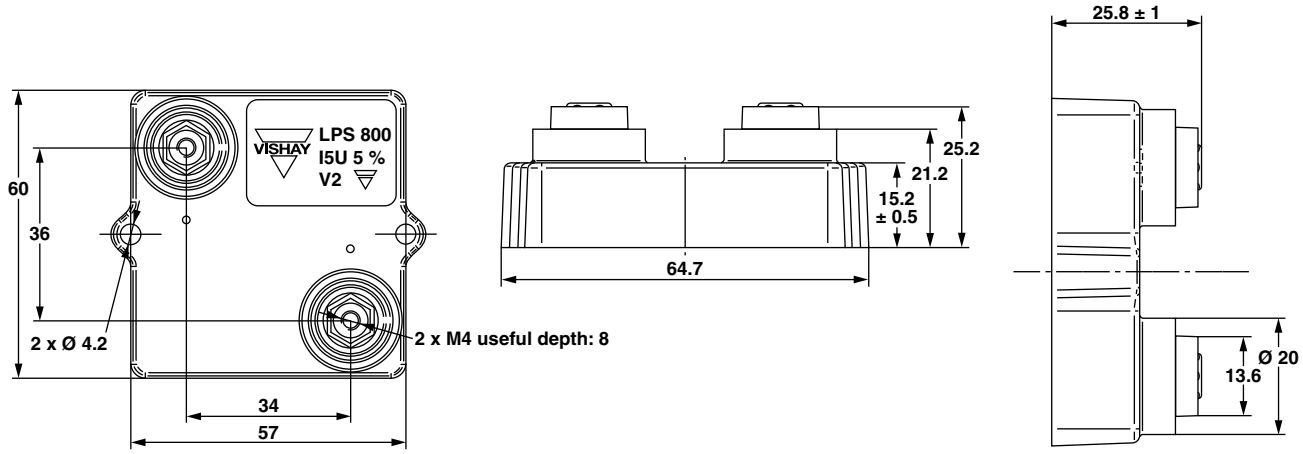

Note

- Tolerances unless stated: ± 0.2 mm

STANDARD ELECTRICAL SPECIFICATIONS

MODEL	RESISTANCE RANGE Ω	RATED POWER $P_{85\,°C}$ W	LIMITING ELEMENT VOLTAGE U_L V	TOLERANCE ± %	TEMPERATURE COEFFICIENT ± ppm/°C	CRITICAL RESISTANCE (Ω)
LPS 800	0.3 to 900K	800	5K	1, 2, 5, 10	150, 300, 500	31.25K

MECHANICAL SPECIFICATIONS

Flammability	Insulated case UL 94 V-0
Resistive Element	Thick film
Substrate	Alumina
End Connections	Screws M4
Tightening Torque Connections	2 Nm
Tightening Torque Heatsink	2 Nm
Maximum Torque	2.5 Nm
Weight	83 g ± 10 %

ENVIRONMENTAL SPECIFICATIONS

Temperature Range	-55 °C to +175 °C
Climatic Category	55 / 175 / 56

TECHNICAL SPECIFICATIONS

Power Rating and Thermal Resistance	800 W at +85 °C bottom case temperature $R_{TH\,(j-c)}$: 0.112 °C/W
Temperature Coefficient -55 °C / +175 °C IEC 60115-1 Standard	$R \leq 1$ Ω: ± 500 ppm/°C 1 Ω < $R \leq 10$ Ω: ± 300 ppm/°C 10 Ω < R: ± 150 ppm/°C
Dielectric Strength IEC 60115-1, 1 min, 10 mA max.	7 kV_{RMS} or 12 kV_{RMS}
Lightning test 1.2/50 µs IEC 61000-4-5	Until 12 kV
Insulation Resistance	≥ 10^4 MΩ
Inductance	≤ 0.1 µH
Partial Discharge (for LPS 800 D only)	≤ 100 pC/7 kV ≤ 10 pC/5 kV Other cases: Consult us

For technical questions, contact: sferfixedresistors@vishay.com
THIS DOCUMENT IS SUBJECT TO CHANGE WITHOUT NOTICE. THE PRODUCTS DESCRIBED HEREIN AND THIS DOCUMENT ARE SUBJECT TO SPECIFIC DISCLAIMERS, SET FORTH AT www.vishay.com/doc?91000

PERFORMANCE		
TESTS	**CONDITIONS**	**REQUIREMENTS**
Momentary Overload	IEC 60115-1 1.5 x P_r / 10 s $U_{max.} \leq U_L$ = 5000 V	± (0.25 % + 0.05 Ω)
Rapid Temperature Change	IEC 60115-1/IEC 30068-2-14 Test Na 50 cycles -55 °C to +175 °C	± (0.5 % + 0.05 Ω)
Load Life	IEC 60115-1 1000 h (90/30) P_r at 85 °C	± (0.5 % + 0.05 Ω)
Humidity (Steady State)	IEC 60115-1 56 days RH 95 % / 40 °C	± (0.5 % + 0.05 Ω)
Vibration	MIL STD 202 method 204 cond. D (10 *g*; 5/500 Hz)	± (0.25 % + 0.05 Ω)
Climatic Sequence	IEC 60115-1 (55 / 175 / 56)	± (1 % + 0.05 Ω)

RECOMMENDATIONS FOR MOUNTING ONTO A HEATSINK

- Surfaces in contact must be carefully cleaned.
- The heatsink must have an acceptable flatness: From 0.05 mm to 0.1 mm/100 mm.
- Roughness of the heatsink must be around 6.3 µm. In order to improve thermal conductivity, surfaces in contact (alumina, heatsink) should be coated with a silicone grease (type Bluesil Past 340 from BlueStar Silicones) or a thermal film (type Q Pad II) easier and faster to install than the grease.
- The fastening of the resistor to the heatsink is under pressure control of two screws tightened at 2 Nm for full power availability.

Tightening Torque on Heatsink	LPS 800
	2 Nm

- The following accessories are supplied with each product:
  - 2 screws CHC M4 x 25 class 8.8 and 2 M4 contact lock washers for heatsink mounting
  - 2 screws TH M4 x 6/6 and 2 M4 contact lock washers for connections.

CHOICE OF THE HEATSINK

The user must choose the heatsink according to the working conditions of the component (power, room temperature). Maximum working temperature must not exceed 175 °C. The dissipated power is simply calculated by the following ratio:

$$P = \frac{\Delta T}{R_{TH\ (j-c)} + R_{TH\ (c-h)} + R_{TH\ (h-a)}}$$

P: Expressed in W

ΔT: Difference between maximum working temperature and room temperature

$R_{TH\ (j-c)}$: Thermal resistance value measured between resistive layer and outer side of the resistor.
It is the thermal resistance of the component: (see specifications environmental paragraph).

$R_{TH\ (c-h)}$: Thermal resistance value measured between outer side of the resistor and upper side of the heatsink.
This is the thermal resistance of the interface (grease, thermal pad), and the quality of the fastening device.

$R_{TH\ (h-a)}$: Thermal resistance of the heatsink.

Example:

$R_{TH\ (c-a)}$ for LPS 800 power dissipation 180 W at +50 °C room temperature.

$\Delta T \leq 175\ °C - 50\ °C = 125\ °C$

$R_{TH\ (j-c)} + R_{TH\ (c-h)} + R_{TH\ (h-a)} = \frac{\Delta T}{P} = \frac{125}{180} = 0.69\ °C/W$

$R_{TH\ (j-c)} = 0.112\ °C/W$

$R_{TH\ (c-h)} + R_{TH\ (h-a)} = 0.69\ °C/W - 0.112\ °C/W = 0.578\ °C/W$

For technical questions, contact: sferfixedresistors@vishay.com
THIS DOCUMENT IS SUBJECT TO CHANGE WITHOUT NOTICE. THE PRODUCTS DESCRIBED HEREIN AND THIS DOCUMENT ARE SUBJECT TO SPECIFIC DISCLAIMERS, SET FORTH AT www.vishay.com/doc?91000

	CONFIG. 1: WATER COOLING HEATSINK CP15 AND THERMAL GREASE BLUESIL PAST 340	CONFIG. 2: AIR COOLING HEATSINK P207/250 AND THERMAL GREASE BLUESIL PAST 340	CONFIG. 3: WATER COOLING HEATSINK CP15 AND THERMAL PAD Q-PAD II	CONFIG. 4: AIR COOLING HEATSINK P207/250 AND THERMAL PAD Q-PAD II
Power dissipation (W)	710	282	307	180
T° resistive element (°C)	175	175	175	175
$R_{TH\ (j\ -\ c)}$ max. (°C/W)	0.112	0.112	0.112	0.112
$R_{TH\ (c\ -\ h)}$ typ. (°C/W)	0.05	0.13	0.34	0.43
$R_{TH\ (h\ -\ a)}$ max. (°C/W)	0.059	0.29	0.059	0.29
Fluid T° (°C)	18	25	18	25

Notes

- **Configuration 1:** Water cooling heatsink CP15 from Lytron (304 mm x 95.3 mm x 8 mm) with water flow rate 4 LPM and thermal grease Bluesil Past 340 from BlueStar silicones.
- **Configuration 2:** Air cooling heatsink P207/250 from Semikron (250 mm x 200 mm x 72 mm) and thermal grease Bluesil Past 340 from BlueStar silicones.
- **Configuration 3:** Water cooling heatsink CP15 from Lytron (304 mm x 95.3 mm x 8 mm) with water flow rate 4 LPM and thermal pad Q-Pad II from Berquist.
- **Configuration 4:** Air cooling heatsink P207/250 from Semikron (250 mm x 200 mm x 72 mm) and thermal pad Q-Pad II from Berquist.

OVERLOADS

In any case the applied voltage must be lower than U_L = 5000 V.

Short time overload: 1.5 x P_r/10 s

Accidental overload: The values indicated on the following graph are applicable to resistors in air or mounted onto a heatsink.

ENERGY CURVE

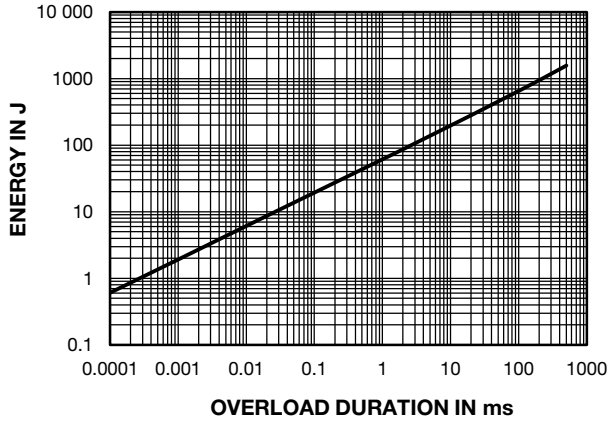

POWER CURVE

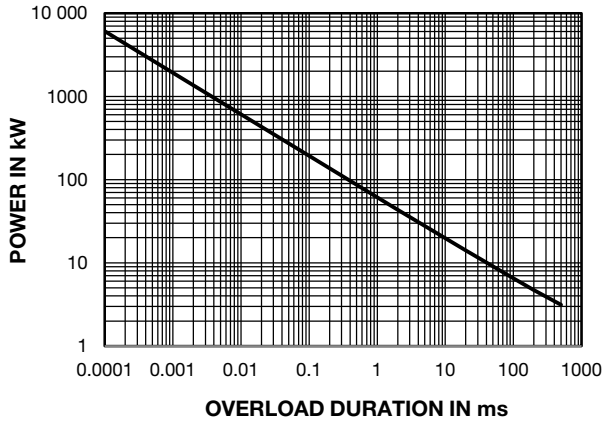

POWER RATING

The temperature of the case should be maintained within the limits specified in the following figure.

To optimize the thermal conduction, contacting surfaces should be coated with silicone grease or thermal film, and heatsink mounting screws tightened to 2 Nm.

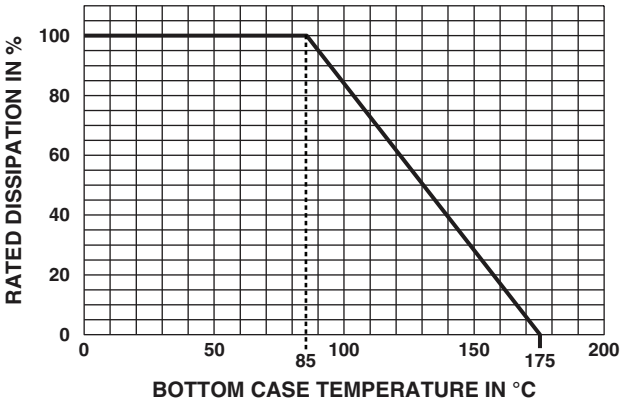

MARKING

Series, style, ohmic value (in Ω), tolerance (in %), manufacturing date, Vishay Sfernice trademark.

PACKAGING
Box of 15 units

For technical questions, contact: sferfixedresistors@vishay.com
THIS DOCUMENT IS SUBJECT TO CHANGE WITHOUT NOTICE. THE PRODUCTS DESCRIBED HEREIN AND THIS DOCUMENT ARE SUBJECT TO SPECIFIC DISCLAIMERS, SET FORTH AT www.vishay.com/doc?91000

ORDERING INFORMATION

LPS	800	100 kΩ	± 1 %	xxx	BO15	e
MODEL	STYLE	RESISTANCE VALUE	TOLERANCE	CUSTOM DESIGN	PACKAGING	LEAD (Pb)-FREE
			± 1 % ± 2 % ± 5 % ± 10 %	Optional on request: special TCR, shape etc.		

GLOBAL PART NUMBER INFORMATION

L	P	S	0	8	0	0	H	4	7	R	0	J	B	

GLOBAL MODEL	DIELECTRIC	OHMIC VALUE	TOLERANCE	PACKAGING	SPECIAL
LPS 800	**L** = dielectric strength 7 kV **H** = dielectric strength 12 kV **D** = partial discharge ≤ 100 pC/7 kV and ≤ 10 pC/5 kV	The first three digits are significant figures and the last digit specifies the number of zeros to follow. R designates decimal point. **48R7** = 48.7 Ω **47R0** = 47 Ω **1001** = 1 kΩ **4R70** = 4.7 Ω **R240** = 0.24 Ω	**F** = 1 % **G** = 2 % **J** = 5 % **K** = 10 %	**B** = box 15 pieces	As applicable ZAx

For technical questions, contact: sferfixedresistors@vishay.com

THIS DOCUMENT IS SUBJECT TO CHANGE WITHOUT NOTICE. THE PRODUCTS DESCRIBED HEREIN AND THIS DOCUMENT ARE SUBJECT TO SPECIFIC DISCLAIMERS, SET FORTH AT www.vishay.com/doc?91000

Disclaimer

ALL PRODUCT, PRODUCT SPECIFICATIONS AND DATA ARE SUBJECT TO CHANGE WITHOUT NOTICE TO IMPROVE RELIABILITY, FUNCTION OR DESIGN OR OTHERWISE.

Vishay Intertechnology, Inc., its affiliates, agents, and employees, and all persons acting on its or their behalf (collectively, “Vishay”), disclaim any and all liability for any errors, inaccuracies or incompleteness contained in any datasheet or in any other disclosure relating to any product.

Vishay makes no warranty, representation or guarantee regarding the suitability of the products for any particular purpose or the continuing production of any product. To the maximum extent permitted by applicable law, Vishay disclaims (i) any and all liability arising out of the application or use of any product, (ii) any and all liability, including without limitation special, consequential or incidental damages, and (iii) any and all implied warranties, including warranties of fitness for particular purpose, non-infringement and merchantability.

Statements regarding the suitability of products for certain types of applications are based on Vishay's knowledge of typical requirements that are often placed on Vishay products in generic applications. Such statements are not binding statements about the suitability of products for a particular application. It is the customer's responsibility to validate that a particular product with the properties described in the product specification is suitable for use in a particular application. Parameters provided in datasheets and / or specifications may vary in different applications and performance may vary over time. All operating parameters, including typical parameters, must be validated for each customer application by the customer's technical experts. Product specifications do not expand or otherwise modify Vishay's terms and conditions of purchase, including but not limited to the warranty expressed therein.

Hyperlinks included in this datasheet may direct users to third-party websites. These links are provided as a convenience and for informational purposes only. Inclusion of these hyperlinks does not constitute an endorsement or an approval by Vishay of any of the products, services or opinions of the corporation, organization or individual associated with the third-party website. Vishay disclaims any and all liability and bears no responsibility for the accuracy, legality or content of the third-party website or for that of subsequent links.

Except as expressly indicated in writing, Vishay products are not designed for use in medical, life-saving, or life-sustaining applications or for any other application in which the failure of the Vishay product could result in personal injury or death. Customers using or selling Vishay products not expressly indicated for use in such applications do so at their own risk. Please contact authorized Vishay personnel to obtain written terms and conditions regarding products designed for such applications.

No license, express or implied, by estoppel or otherwise, to any intellectual property rights is granted by this document or by any conduct of Vishay. Product names and markings noted herein may be trademarks of their respective owners.

© 2024 VISHAY INTERTECHNOLOGY, INC. ALL RIGHTS RESERVED